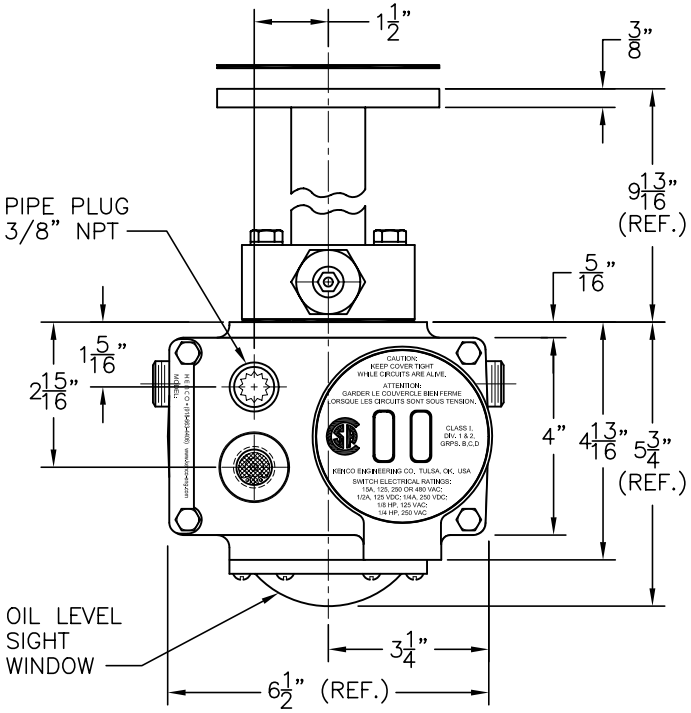

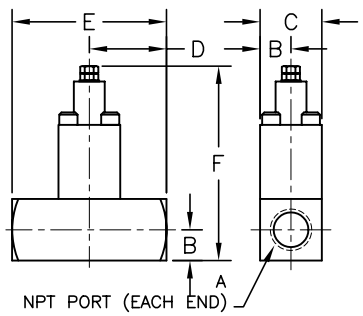

FIRE SAFE VALVE

MODEL 50–FS:
A–1/2" NPT
B–5/8"
C–1–1/4"
D–1–9/16"
E–3–1/8"
F–3–15/16"

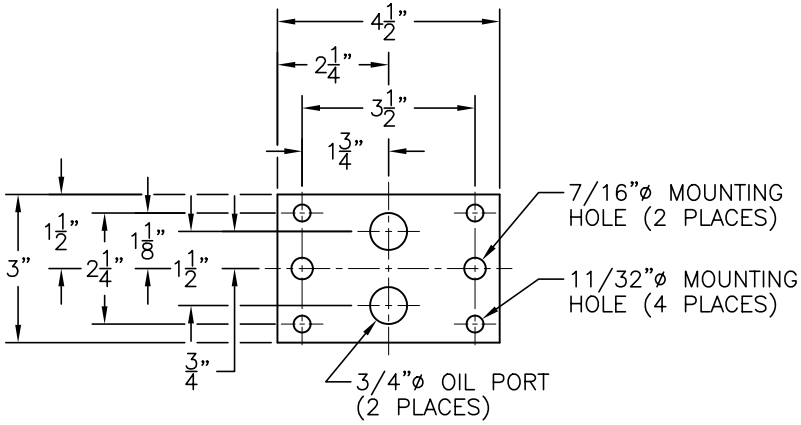

ADAPTER MOUNTING PLATE DETAIL A–A

MODEL KLCE-24-FS
MODEL KLCE-DPDT-24-FS
MODEL KHL-24-FS
MODEL KHL-DPDT-24-FS
MODEL KSHL-24-FS
MODEL KSLL-24-FS

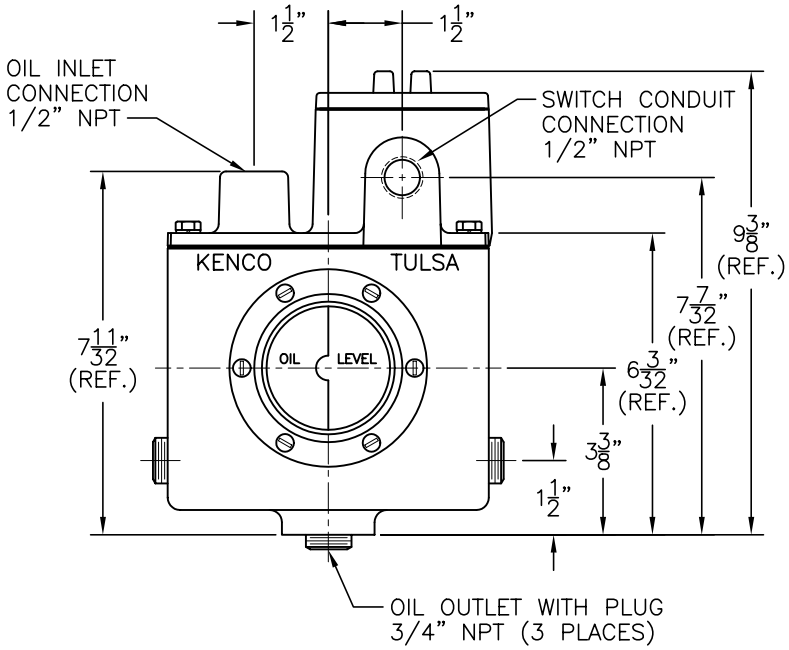

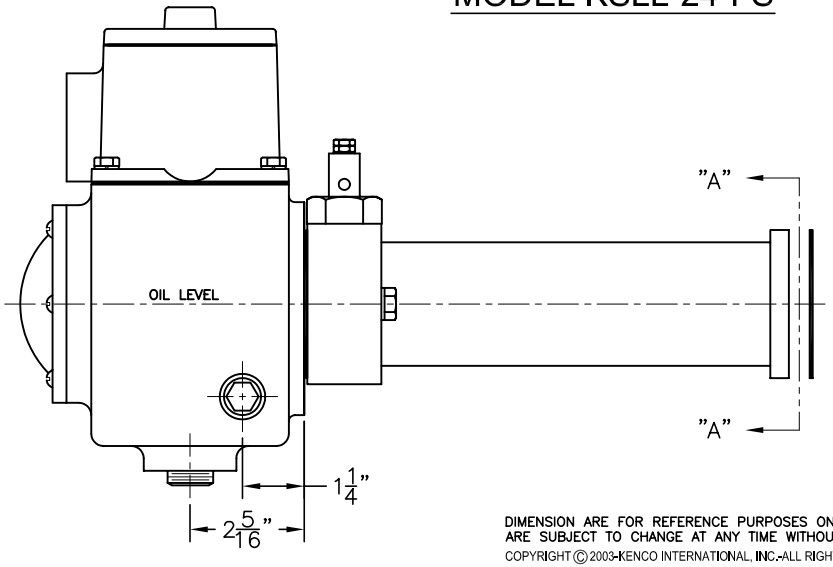

DIMENSION ARE FOR REFERENCE PURPOSES ONLY AND ARE SUBJECT TO CHANGE AT ANY TIME WITHOUT NOTICE.

COPYRIGHT © 2003-KENCO INTERNATIONAL, INC.-ALL RIGHTS RESERVED

REV.	DATE	BY	ECN	EXPLANATION:

KENCO ENGINEERING COMPANY
TULSA, OKLAHOMA

CONTROLLER, OIL LEVEL WITH MOUNT (OUTLINE DRAWING) MODEL KLCE–24–FS

DATE: 02–04–03	SHEET: 1 OF 1	DRAWING NUMBER
DRN. BY: DS	CHKD. BY:	C–44738
SCALE: NONE	REVISION:	