MODEL KPS-27

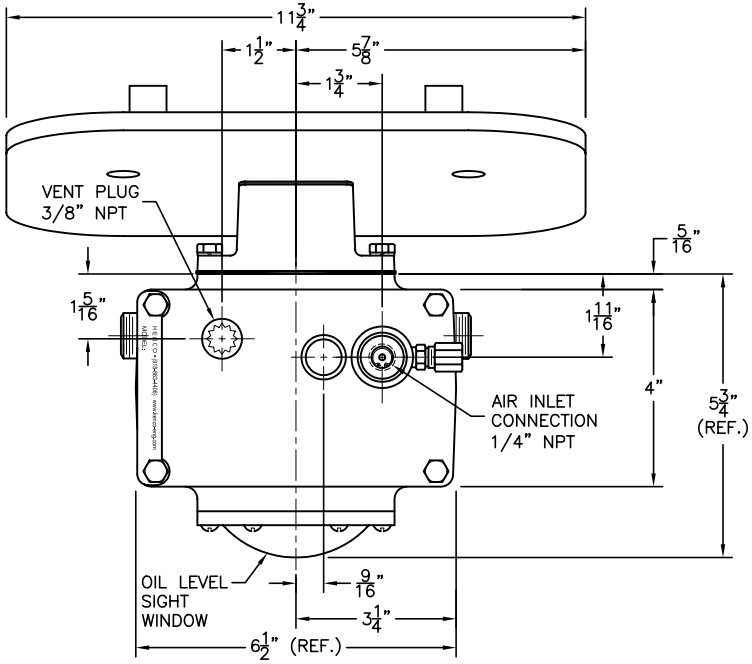

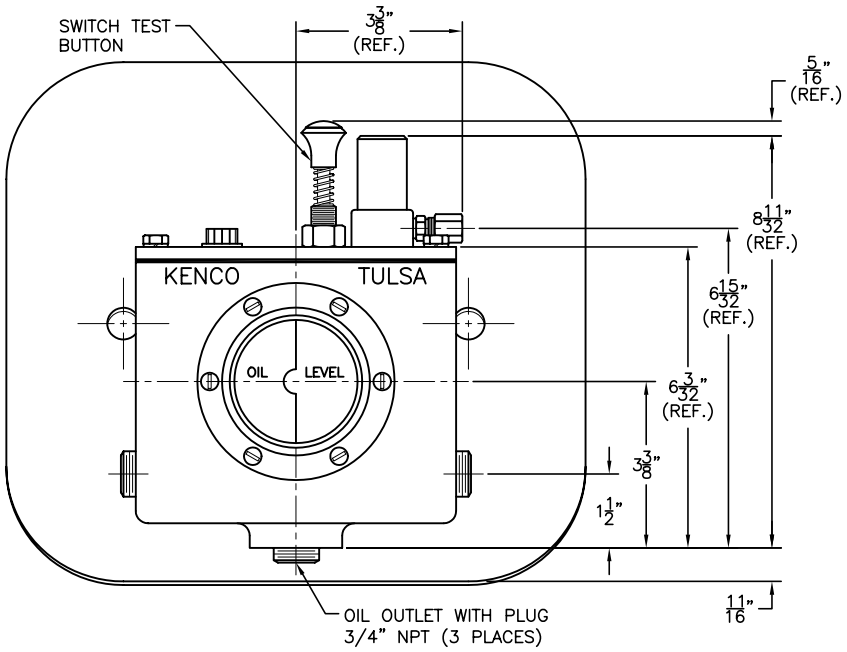

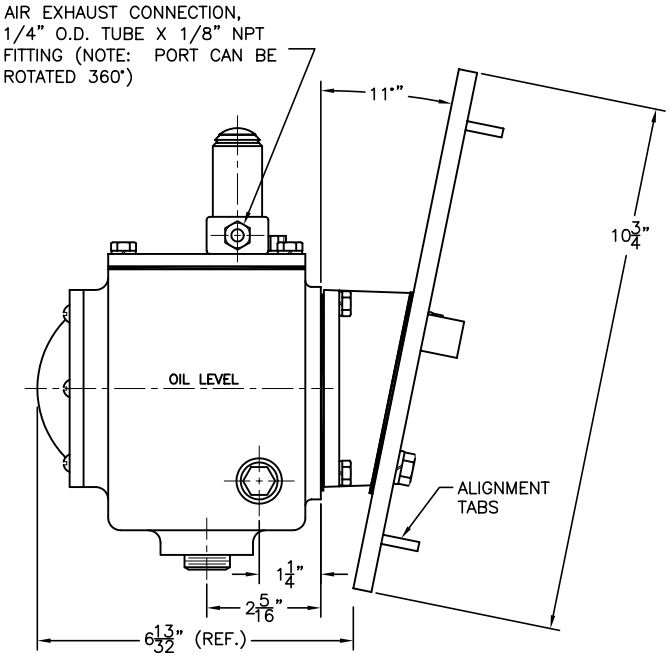

DIMENSION ARE FOR REFERENCE PURPOSES ONLY AND ARE SUBJECT TO CHANGE AT ANY TIME WITHOUT NOTICE.

COPYRIGHT © 2003-KENCO INTERNATIONAL, INC.-ALL RIGHTS RESERVED

WAUKESHA VHP ENGINES

(HAVING INSPECTION DOOR WITH (2) MOUNTING BOLTS)

F2895, F3251, F5108, L5790, AND L7042

(Supplied with all mounting hardware/seals)

REV.	DATE	BY	ECN	EXPLANATION:

KENCO ENGINEERING COMPANY
TULSA, OKLAHOMA

CONTROLLER, OIL LEVEL WITH MOUNT
(OUTLINE DRAWING) MODEL KPS-27

DATE: 02-04-03	SHEET: 1 OF 1	DRAWING NUMBER
DRN. BY: DS	CHKD. BY:	C-44803
SCALE: NONE	REVISION:	