MODEL KPS-12-FS

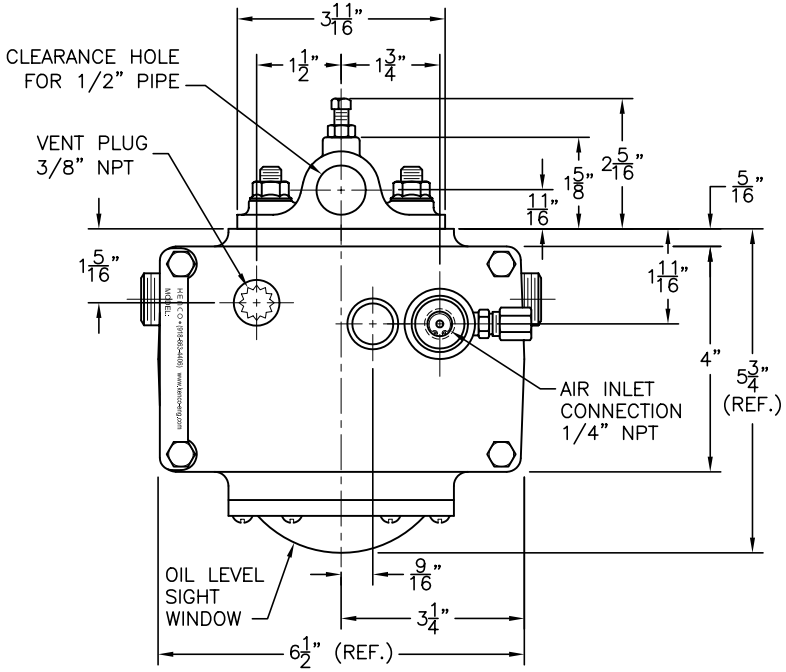

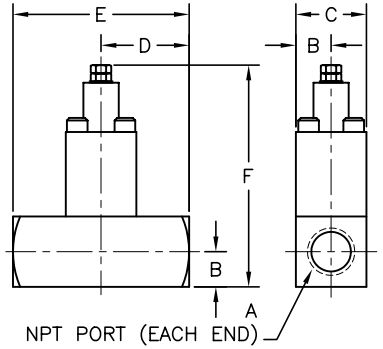

FIRE SAFE VALVE

MODEL 75–FS:
A–3/4" NPT
B–3/4"
C–1–1/2"
D–1–3/4"
E–3–1/2"
F–4–7/16"

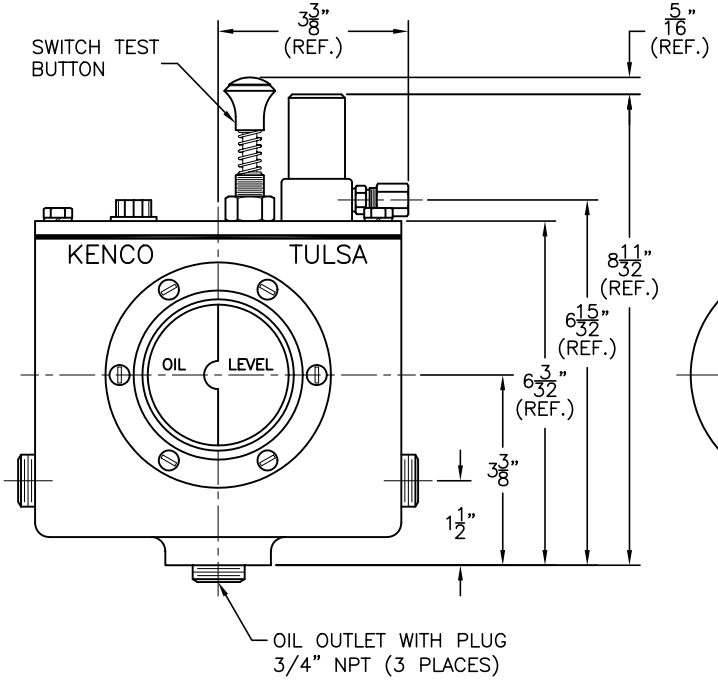

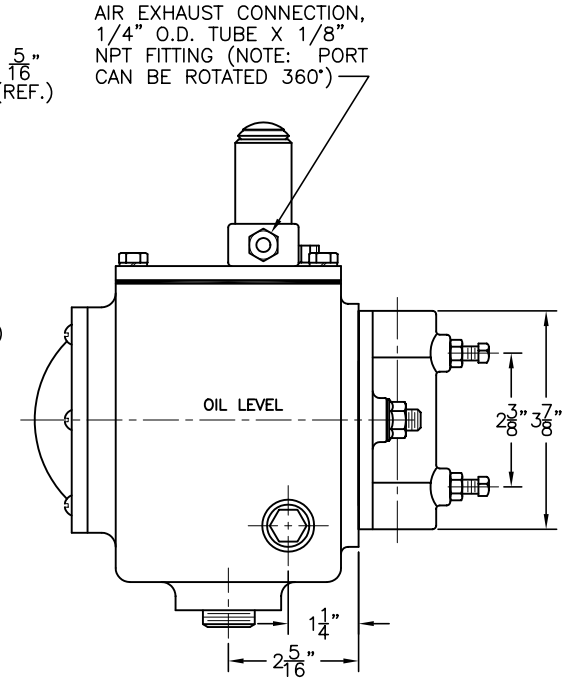

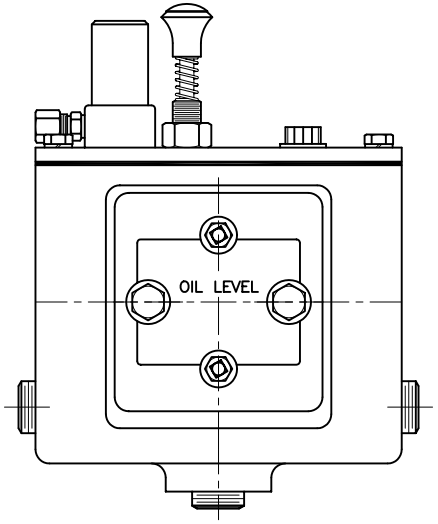

DIMENSION ARE FOR REFERENCE PURPOSES ONLY AND ARE SUBJECT TO CHANGE AT ANY TIME WITHOUT NOTICE.

COPYRIGHT © 2003-KENCO INTERNATIONAL, INC.-ALL RIGHTS RESERVED

REV.	DATE	BY	ECN	EXPLANATION:

KENCO ENGINEERING COMPANY
TULSA, OKLAHOMA

CONTROLLER, OIL LEVEL WITH MOUNT (OUTLINE DRAWING) MODEL KPS–12–FS

DATE: 02–03–03	SHEET: 1 OF 1	DRAWING NUMBER
DRN. BY: DS	CHKD. BY:	C–44799
SCALE: NONE	REVISION:	