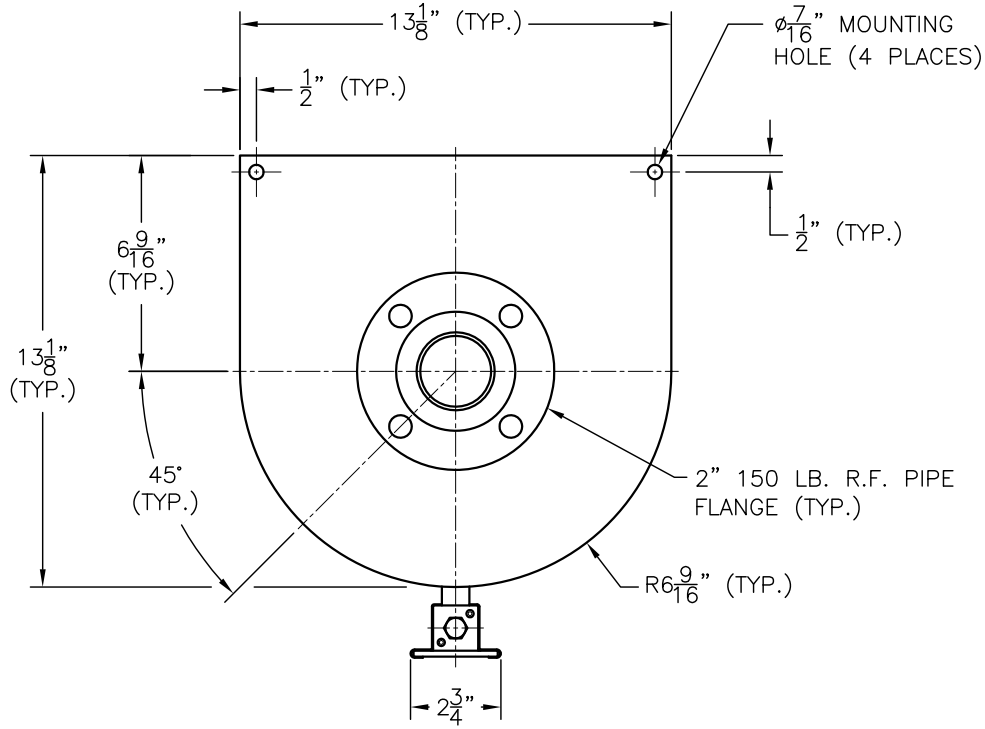

ORDERING INFORMATION			
MODEL NUMBER	TANK MATERIAL	SEAL MATERIAL	SCALE CALIBRATION
15867	CS OR SS	A, B, E, V OR T	SEE TABLE BELOW

EXAMPLE MODEL NUMBER: 15867–SS–V–GPH

SCALE CALIBRATION OPTIONS / DEFINITIONS	MAXIMUM PUMPING RATE/GAUGE VOLUME	SCALE CALIBRATION INCREMENT VALUE
GPH=GALLONS PER HOUR	620	10
LPH=LITERS PER HOUR	2346.95	25
GPD=GALLONS PER DAY	14880	200
LPD=LITERS PER DAY	56326.75	500
GBV=GALLONS BY VOLUME	10.33	0.1
LBV=LITERS BY VOLUME	39.12	0.5

NOTE: GPH/LPH/GPD/LPD SCALES ARE BASED ON A ONE MINUTE TEST.

WETTED PARTS: TANK, SIGHT TUBE AND SIGHT TUBE O–RING SEALS

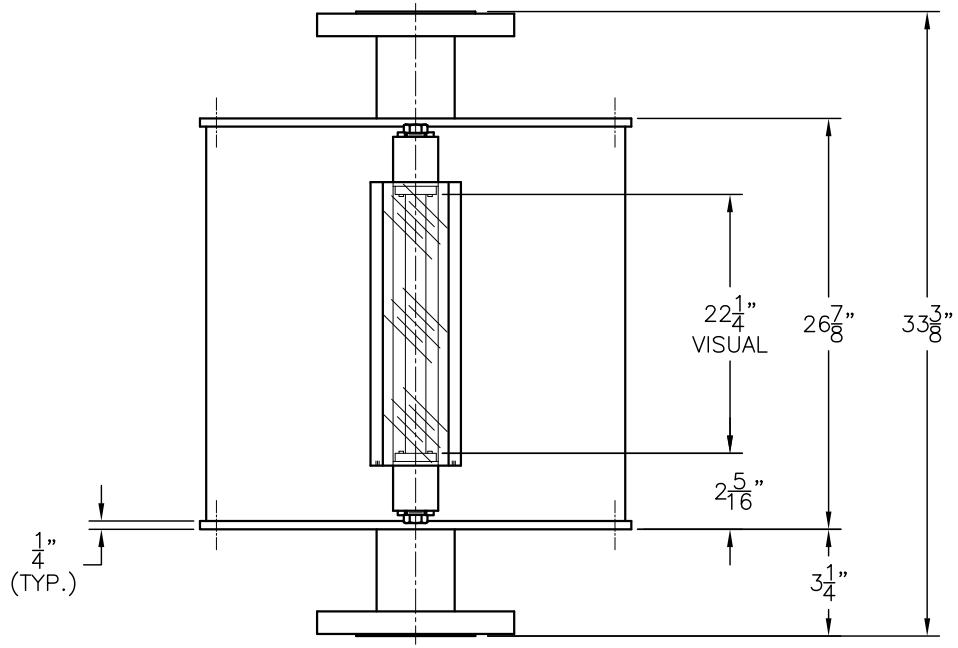

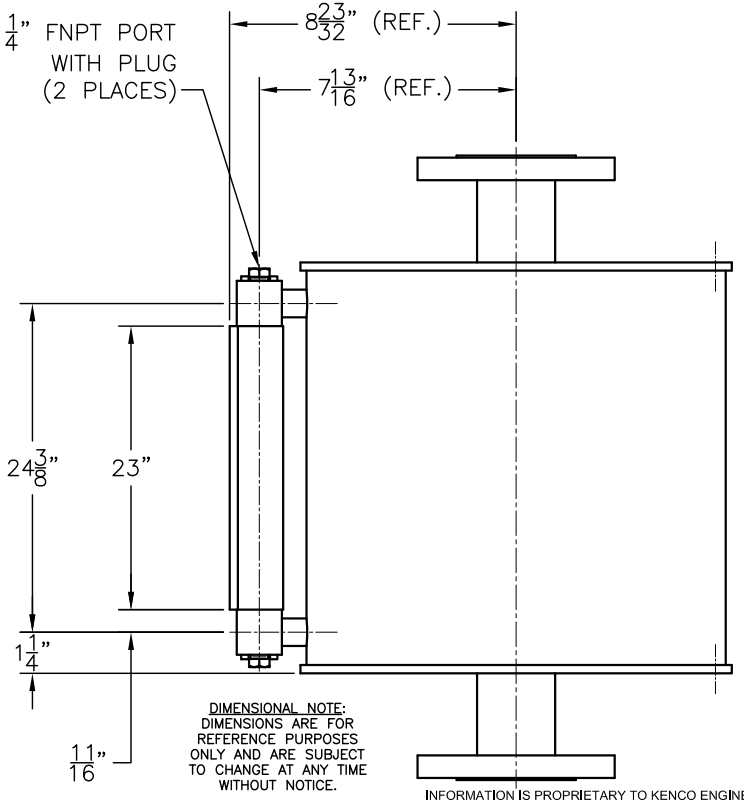

DIMENSIONAL NOTE: DIMENSIONS ARE FOR REFERENCE PURPOSES ONLY AND ARE SUBJECT TO CHANGE AT ANY TIME WITHOUT NOTICE.

INFORMATION IS PROPRIETARY TO KENCO ENGINEERING CO.

PART NUMBER AND MATERIAL DESIGNATION:

DRAWING NO.	MODEL NO.	MATERIAL:
C–15867–CS	15867–CS	(CARBON STEEL TANK WITH 316/316L STAINLESS STEEL WETTED PARTS ON SIGHT GAUGE)
C–15867–SS	15867–SS	(316/316L STAINLESS STEEL CONSTRUCTION)

REV.	DATE	BY	CHKD.	ECN	EXPLANATION:
A	05–05–10	DS	PAS	000008	ITEM 6 WAS P–13698; ADDED SHEET 2 OF 2; ADDED 13114–A

KENCO ENGINEERING COMPANY
TULSA, OKLAHOMA

POT, CALIBRATION (OUTLINE)
MODEL NO. 15867

DATE: 10–06–05 | SHEET: 1 OF 2 | DRAWING NUMBER
DRN. BY: DS | CHKD. BY: KI | C–15867
SCALE: NONE | REVISION: A