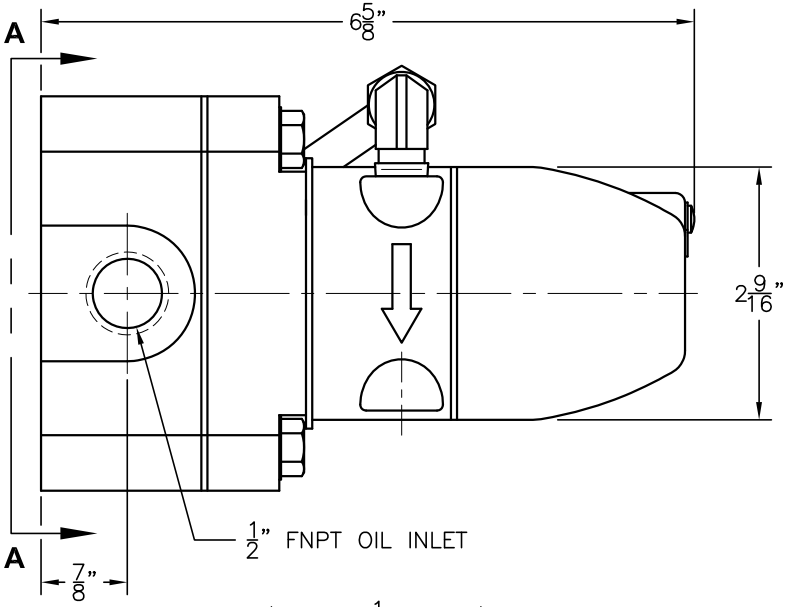

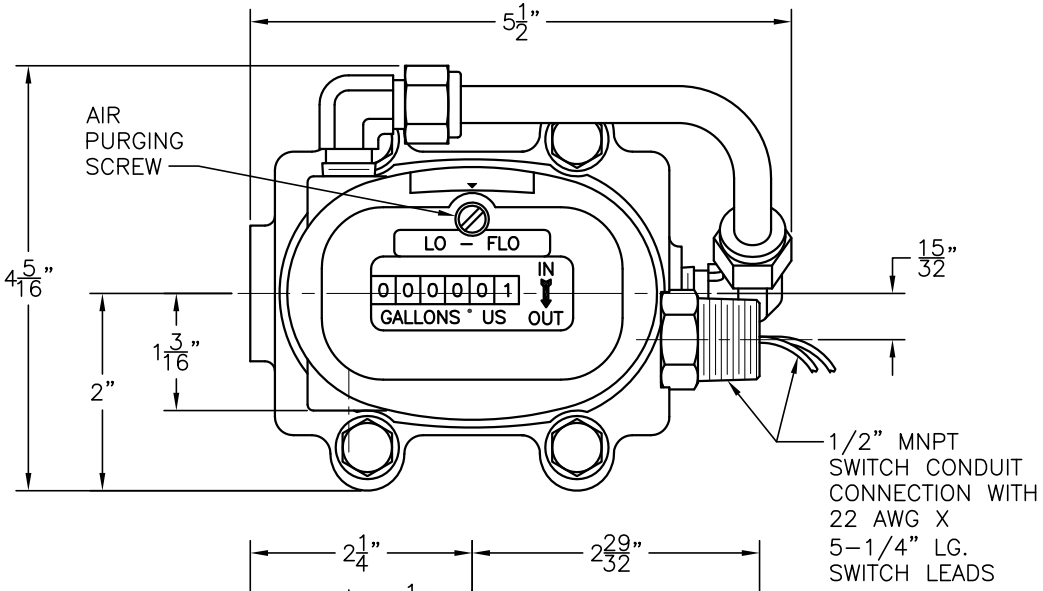

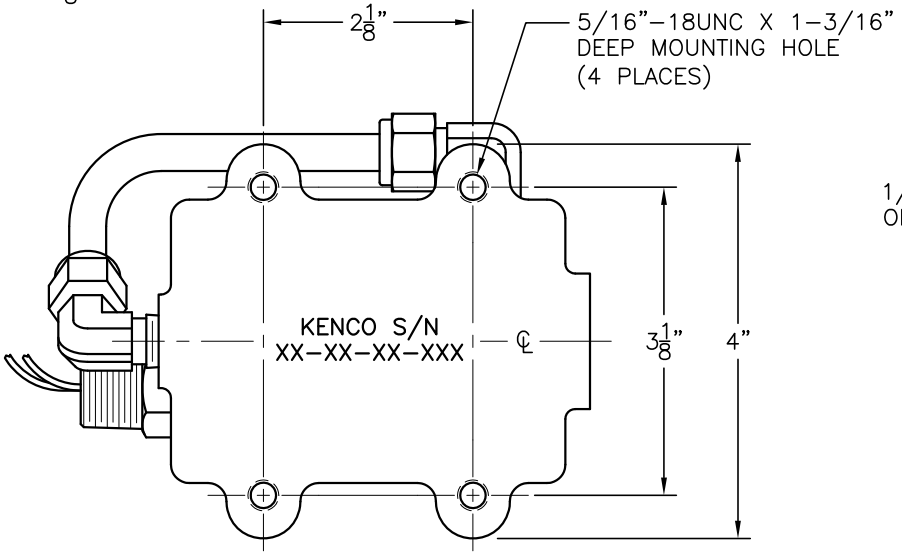

VIEW A - A

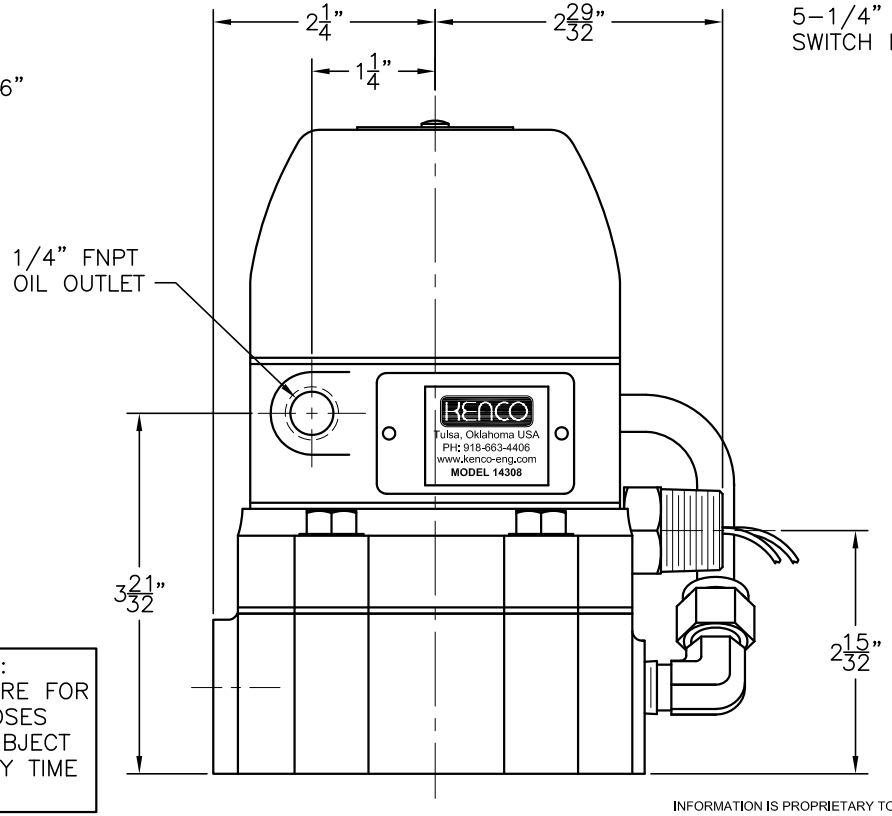

METER SPECIFICATIONS:
- FLOW RATE RANGE: 0.05 TO 5 GALLONS PER HOUR
- WORKING PRESSURE RANGE: 4.6 TO 50 P.S.I.G.
- MECHANICAL COUNTER RANGE: 9999.99 GALLONS
- MECHANICAL COUNTER RESOLUTION: 0.01 GALLON

SWITCH SPECIFICATIONS:
- TYPE: HERMETICALLY SEALED REED
- CIRCUITRY: S.P.S.T. NORMALLY OPEN
- CONTACT RESOLUTION: 0.02 GALLON
- MAXIMUM VOLTAGE: 100 VDC; 140 VAC
- MAXIMUM CURRENT: 0.25 AMPS DC; 0.18 AMPS AC
- MAXIMUM POWER: 7 WATTS

DIMENSIONAL NOTE:
ALL DIMENSIONS ARE FOR REFERENCE PURPOSES ONLY AND ARE SUBJECT TO CHANGE AT ANY TIME WITHOUT NOTICE.

REV.	DATE	BY	CHKD.	ECN	EXPLANATION:

INFORMATION IS PROPRIETARY TO KENCO ENGINEERING CO.

TOLERANCES UNLESS OTHERWISE SPECIFIED
DECIMAL: ±.005" FRACTIONAL: ±1/64" ANGULAR: ±1/2°

KENCO ENGINEERING COMPANY
TULSA, OKLAHOMA

METER, LOW FLOW MODEL 14308

DATE: 06–26–91	SHEET: 2 OF 2	DRAWING NUMBER
DRN. BY:	CHKD. BY: SKM	C–14308
SCALE: NONE	REVISION: B	