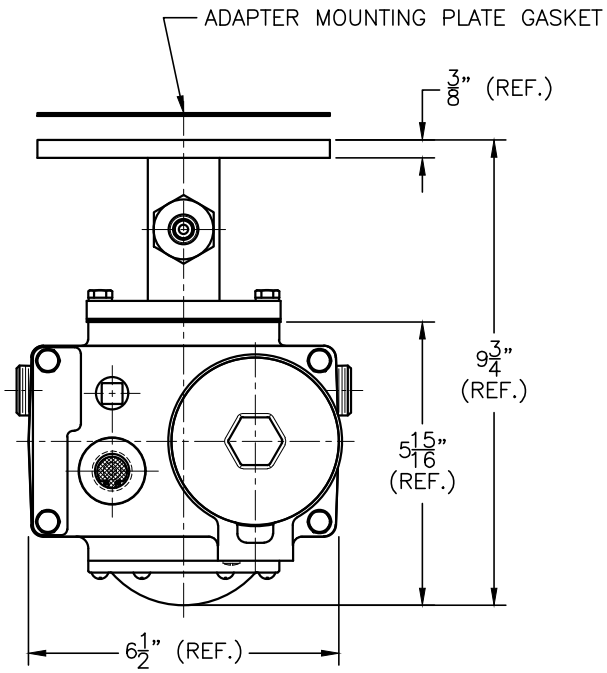

DIMENSIONAL NOTES:
DRAWING REFLECTS KLCE, KHL, KSHL AND KSLL TYPE CONTROLLERS. FOR DETAILED DIMENSIONS OF THESE AND OTHER CONTROLLERS AND SWITCHES, REFER TO OUTLINE DRAWING FOR SPECIFIC UNIT DESIRED.

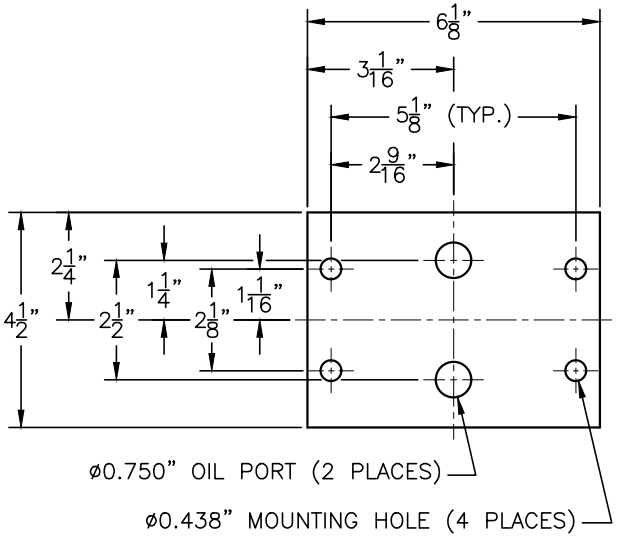

ADAPTER MOUNTING PLATE
DETAIL A–A

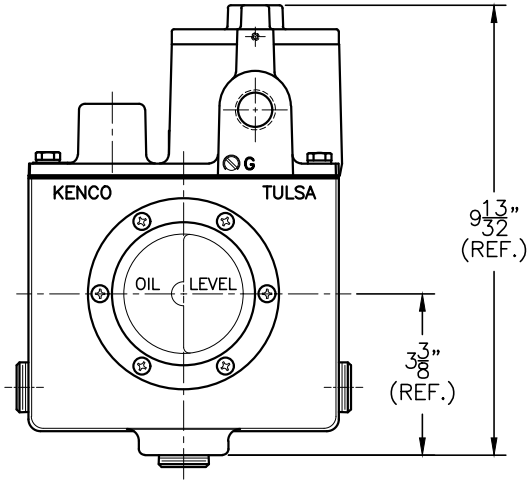

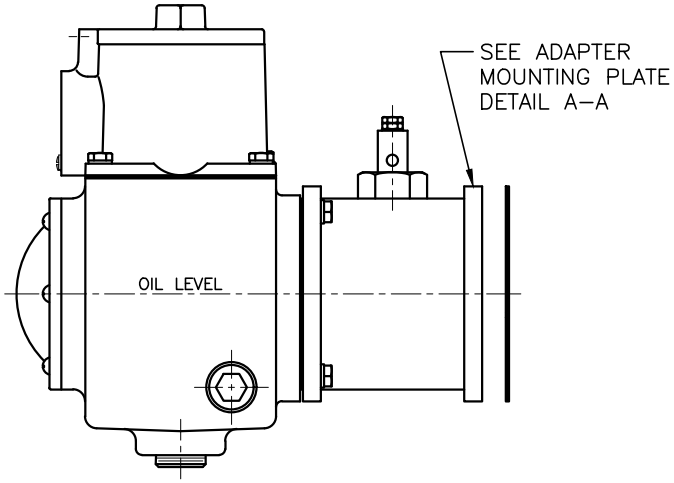

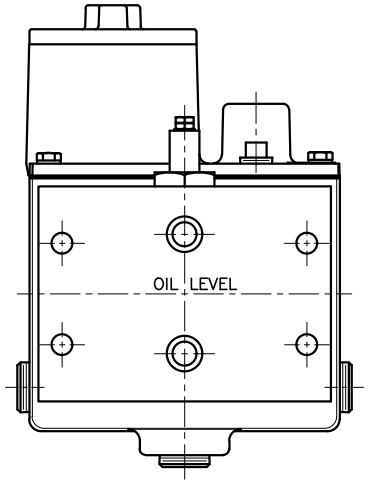

DIMENSIONS ARE FOR REFERENCE PURPOSES ONLY AND ARE SUBJECT TO CHANGE AT ANY TIME WITHOUT NOTICE.

INFORMATION IS PROPRIETARY TO KENCO ENGINEERING CO.

FOR ARIEL CORPORATION COMPRESSORS:
KBC (2/4/6 CYLINDER), KBD (2/4/6 CYLINDER)
AND KBF (2/4/6 CYLINDER)

REV.	DATE	BY	CHKD.	ECN	EXPLANATION:

KENCO ENGINEERING COMPANY
TULSA, OKLAHOMA

CONTROLLER, OIL LEVEL MODEL
KLCE TYPE WITH TYPE 23–FS ADAPTER

DATE: 05–18–22	SHEET: 1 OF 2	DRAWING NUMBER
DRN. BY: RDM	CHKD. BY: DM	89805
SCALE: 1/2"=1"	REVISION:	