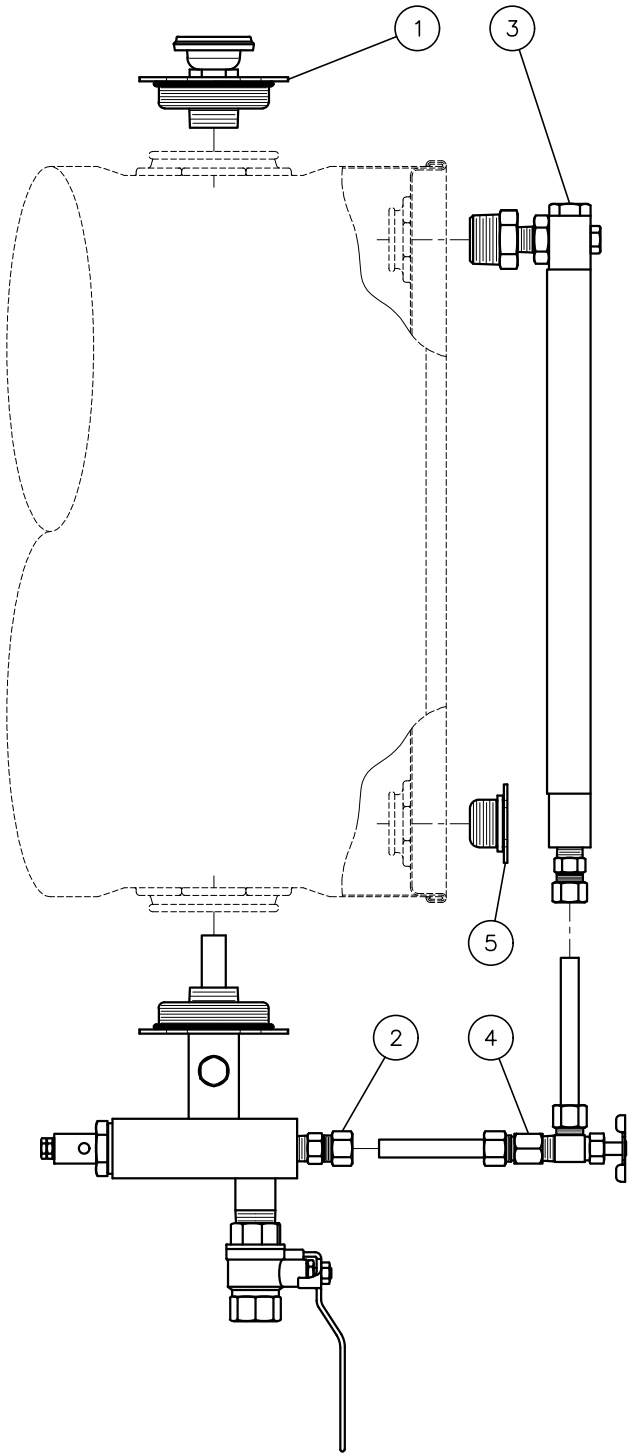

BILL OF MATERIALS

ITEM	QTY.	PART NUMBER	DESCRIPTION
1	1	52427	BREATHER, TANK (ASSEMBLY)
2	1	50111	VALVE, FIRE SAFE WITH CONDENSATE DRAIN (ASSEMBLY)
3	1	SEE TABLE	GAUGE, SIGHT (ASSEMBLY)
4	1	54011	VALVE, ISOLATION (ASSEMBLY)
5	1	50258	PLUG, DRUM WITH GASKET
6	1	50314	TAPE, PTFE
7	1	62924	INSTRUCTIONS, INSTALLATION
8	1	11254	BAG, PLASTIC
9	160"	67704	PAPER, PACKING
10	1	47599	BOX, CORRUGATED
11	1	63217	DECAL, BOX (GENERIC)
12	24"	61662	WRAP, FOAM

SHIPPING NOTES:

- ITEMS 1, 2, 4, 5 AND 6 TO BE PLACED IN ITEM 8 BAG AND STAPLED CLOSED.
- ITEM 3 SIGHT GAUGE TO BE WRAPPED AND TAPED WITH ITEM 12 FOAM.
- BAGGED ITEMS, WRAPPED ITEM 3 SIGHT GAUGE AND ITEM 7 INSTALLATION INSTRUCTIONS TO BE PACKED INSIDE ITEM 10 BOX USING ITEM 9 PACKING PAPER.
- ITEM 11 DECAL TO BE PRINTED WITH APPROPRIATE TANK KIT MODEL NUMBER AND PLACED ON END OF ITEM 10 BOX FOR SHIPMENT.

SUPPLIED BUT NOT SHOWN: 6 7 8 9 10 11 12

TANK KIT MODEL NUMBER / PART NUMBER AND ITEM 3 SIGHT GAUGE PART NUMBER TABLE

TANK KIT MODEL NUMBER	TANK KIT PART NUMBER	ITEM 3 SIGHT GAUGE PART NUMBER
15G–FS–CD–44–IV–TK	54025	53628
15G–FS–CD–44–IV–GALV–TK		
K16G–FS–CD–44–IV–TK	83421	61631
K16G–FS–CD–44–IV–GALV–TK		
K30G–FS–CD–44–IV–TK	54026	53629
K30G–FS–CD–44–IV–GALV–TK		
K55G–FS–CD–44–IV–TK	54027	53630
K55G–FS–CD–44–IV–GALV–TK		

REV.	DATE	BY	CHKD.	ECN	EXPLANATION:
A	04–30–09	EM	UNK	N/A	ADDED "–GALV" TANK KITS
B	02–28–25	RDM	DM	N/A	ADDED K16G KIT P/N 83421; ITEM 1 P/N WAS 50095 ON "–GALV" KITS; ITEM 2 P/N WAS 50111–GALV ON "–GALV" KITS; ITEM 7 P/N WAS 56804; ADDED ITEMS 8–11

TOLERANCES UNLESS OTHERWISE SPECIFIED
DECIMAL: ±.005" FRACTIONAL: ±1/64" ANGULAR: ±1/2°

KENCO ENGINEERING COMPANY
TULSA, OKLAHOMA

KIT, TANK MODEL 15G–FS–CD–44–IV–TK, K16G–FS–CD–44–IV–TK, K30G–FS–CD–44–IV–TK AND K55G–FS–CD–44–IV–TK

DATE: 03–03–08 SHEET: 1 OF 1 DRAWING NUMBER
DRN. BY: DS/RDM CHKD. BY: KI 54025
SCALE: NONE REVISION: B