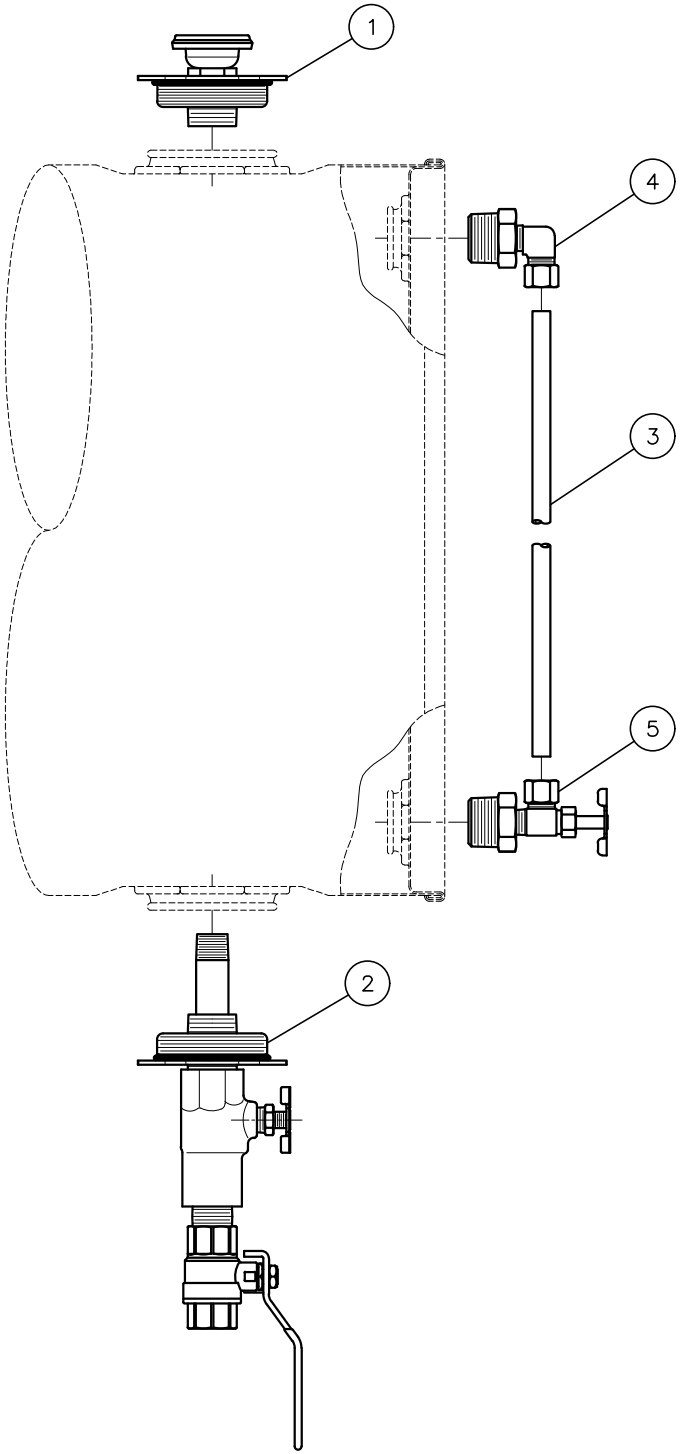

BILL OF MATERIALS

ITEM	QTY.	PART NUMBER	DESCRIPTION
1	1	52427	BREATHER, TANK (ASSEMBLY)
2	1	50040	VALVE, CONDENSATE DRAIN (ASSEMBLY)
3	1	SEE TABLE	TUBE, SIGHT
4	1	50009	CONNECTION, SIGHT TUBE (ASSEMBLY)
5	1	50008	VALVE, ISOLATION (ASSEMBLY)
6	1	50314	TAPE, PTFE
7	1	62916	INSTRUCTIONS, INSTALLATION
8	1	11294	BAG, PLASTIC
9	80"	67704	PAPER, PACKING
10	1	7366	BOX, CORRUGATED
11	1	63217	DECAL, BOX (GENERIC)

SHIPPING NOTES:
- ITEMS 1, 2, 4, 5 AND 6 TO BE PLACED IN ITEM 8 BAG.
- BAGGED ITEMS, ITEM 3 SIGHT TUBE AND ITEM 7 INSTALLATION INSTRUCTIONS TO BE PACKED INSIDE ITEM 10 BOX USING ITEM 9 PACKING PAPER.
- ITEM 11 DECAL TO BE PRINTED WITH APPROPRIATE TANK KIT MODEL NUMBER AND PLACED ON END OF ITEM 10 BOX FOR SHIPMENT.

SUPPLIED BUT NOT SHOWN: 6 7 8 9 10 11

TANK KIT MODEL NUMBER / PART NUMBER AND ITEM 3 SIGHT TUBE PART NUMBER TABLE

TANK KIT MODEL NUMBER	TANK KIT PART NUMBER	ITEM 3 SIGHT TUBE PART NUMBER
15G–CD–IV–TK	50737	50005
15G–CD–IV–GALV–TK		
K16G–CD–IV–TK	83413	61550
K16G–CD–IV–GALV–TK		
K30G–CD–IV–TK	50738	50006
K30G–CD–IV–GALV–TK		
K55G–CD–IV–TK	50739	50007
K55G–CD–IV–GALV–TK		

INFORMATION IS PROPRIETARY TO KENCO ENGINEERING CO.

TOLERANCES UNLESS OTHERWISE SPECIFIED
DECIMAL: ±.005" FRACTIONAL: ±1/64" ANGULAR: ±1/2°

REV.	DATE	BY	CHKD.	ECN	EXPLANATION:
A	05–07–07	KI	UNK	N/A	ITEM 1 P/N WAS 50095
B	04–28–09	EM	UNK	N/A	ADDED "–GALV" TANK KITS
C	03–04–25	RDM	DM	N/A	ADDED K16G KIT P/N 83413; ITEM 1 P/N WAS 50095 ON GALV KITS; ITEM 2 P/N WAS 50040–GALV ON GALV KITS; ADDED ITEMS 8–11; ITEM 7 P/N WAS 50274

KENCO ENGINEERING COMPANY
TULSA, OKLAHOMA

KIT, TANK 15G–CD–IV–TK, K16G–CD–IV–TK, K30G–CD–IV–TK AND K55G–CD–IV–TK

DATE: 06–30–06 SHEET: 1 OF 1 DRAWING NUMBER
DRN. BY: DS/RDM CHKD. BY: KI 50737
SCALE: NONE REVISION: C