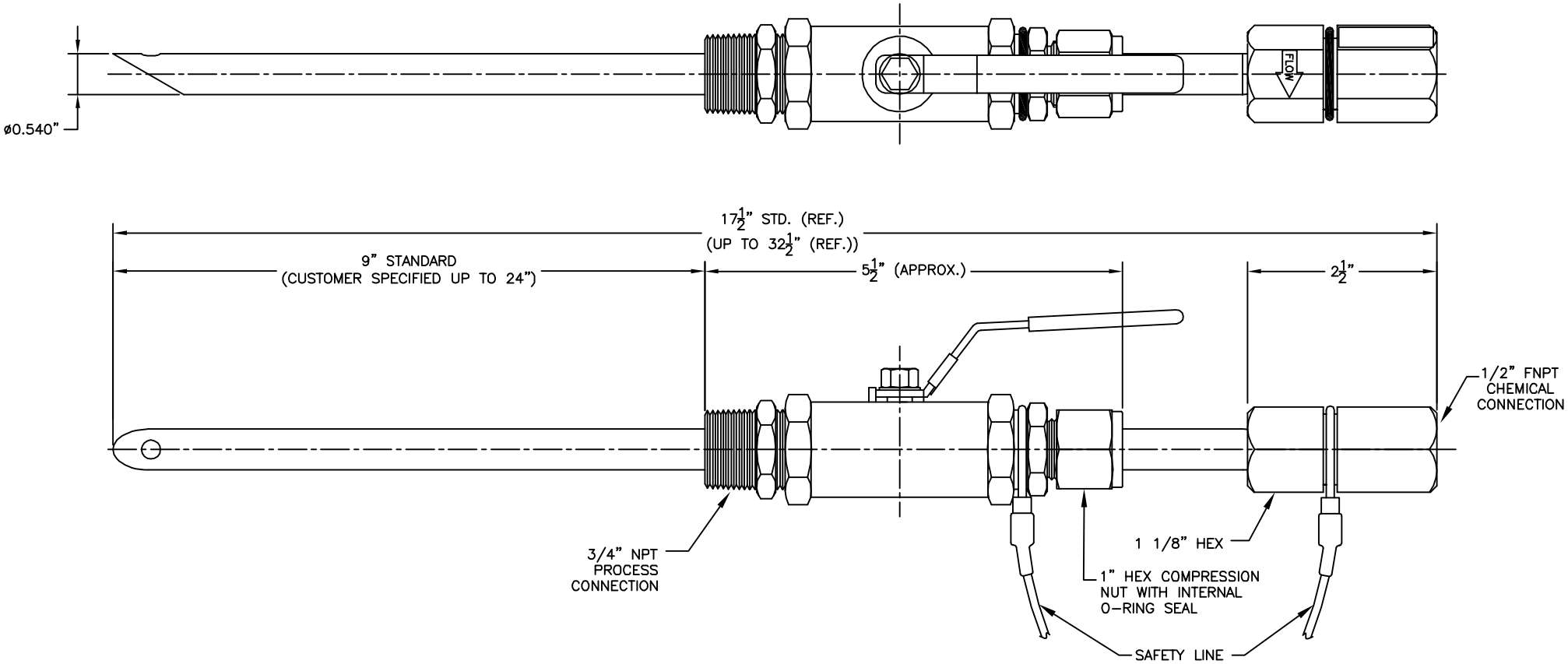

DIMENSIONAL NOTE:
DIMENSIONS ARE FOR REFERENCE PURPOSES ONLY AND ARE SUBJECT TO CHANGE AT ANY TIME WITHOUT NOTICE.

O-RING SEAL MATERIAL DESIGNATIONS:
A=AFLAS; B=BUNA-N; E=ETHYLENE PROPYLENE;
V=FLUOROCARBON; K=KALREZ

REV.	DATE	BY	ECN	EXPLANATION:
A	10-29-04	DS	–	SAFETY LINE WAS SASH CHAIN; ADDED FLOW
				ARROW; OAL WAS 17-1/4"; MAX INS. WAS
				8 3/4"
B	03-31-08	DS	N/A	ADDED: (CUSTOMER SPECIFIED UP TO 24");
				ADDED: (UP TO 32-1/2" (REF.))

KENCO ENGINEERING COMPANY
TULSA, OKLAHOMA

INJECTOR, RETRACTABLE (OUTLINE DRAWING) 316 SS BODY, 316 SS VALVE, w/CHECK VALVE, NO BODY BLEED, MODEL KRINJ-75-S6-9-S6-CVN-(SEAL MAT'L)

DATE: 06-08-04	SHEET: 1 OF 1	DRAWING NUMBER
DRN. BY: PMM	CHKD. BY:	B-47181
SCALE: NONE	REVISION: B	