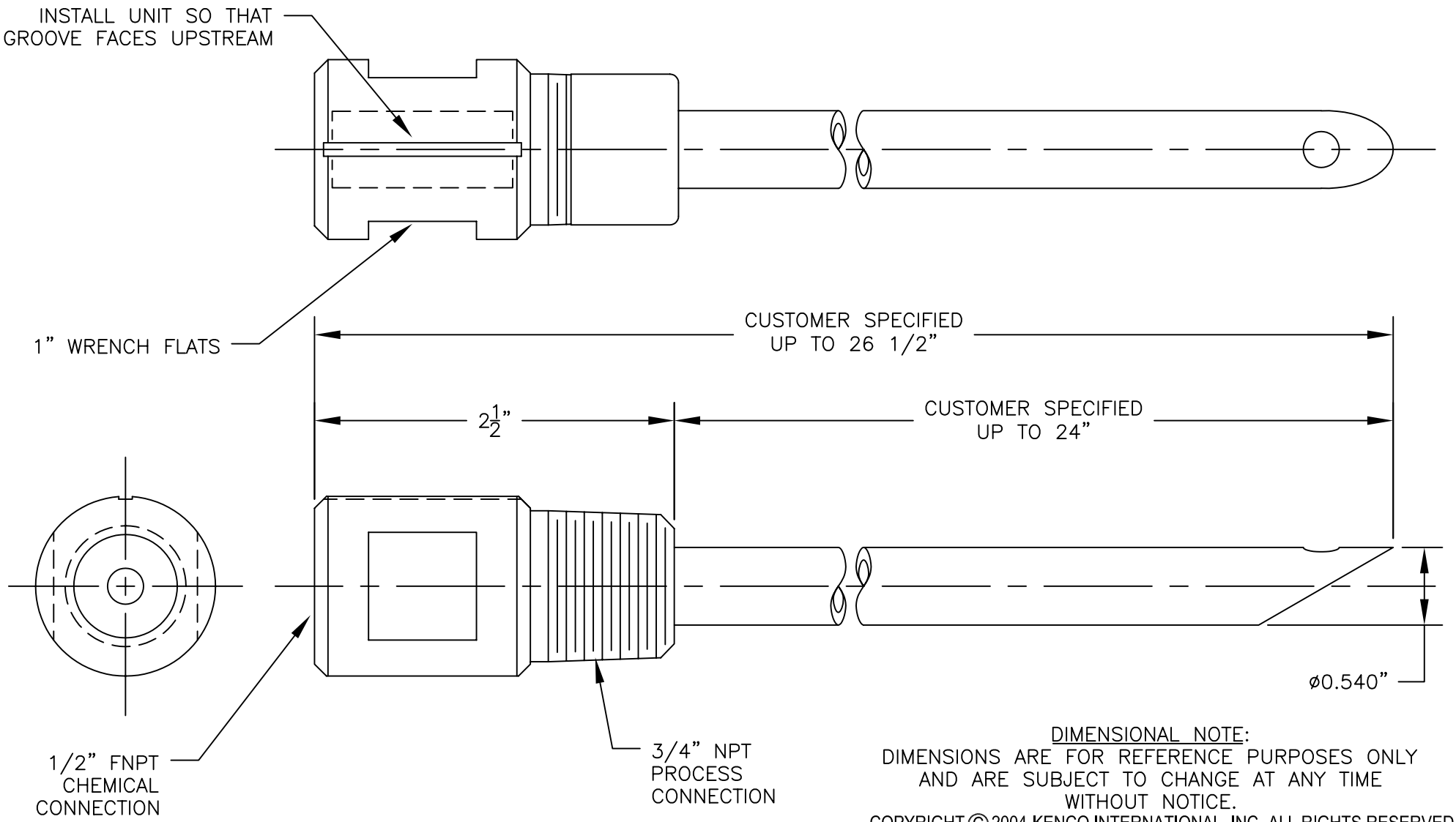

DIMENSIONAL NOTE:
DIMENSIONS ARE FOR REFERENCE PURPOSES ONLY AND ARE SUBJECT TO CHANGE AT ANY TIME WITHOUT NOTICE.

COPYRIGHT © 2004-KENCO INTERNATIONAL, INC.-ALL RIGHTS RESERVED

TOLERANCES UNLESS OTHERWISE SPECIFIED		
DECIMAL: ±.005"	FRACTIONAL: ±1/64"	ANGULAR: ±1/2°

REV.	DATE	BY	ECN	EXPLANATION:
A	11-10-04	PMM	N/A	ORIENTATION GROOVE WAS MACHINED DIMPLE

KENCO ENGINEERING COMPANY
TULSA, OKLAHOMA

INJECTOR, 3/4" NPT, CPVC
(OUTLINE DRAWING) MODEL KINJ-75-CP-LXX

DATE: 06-08-04	SHEET: 1 OF 1	DRAWING NUMBER
DRN. BY: PM	CHKD. BY:	A-47168
SCALE: NONE	REVISION: A	