MODEL ESP-2.00-1.50
MODEL ST-2.00-1.50

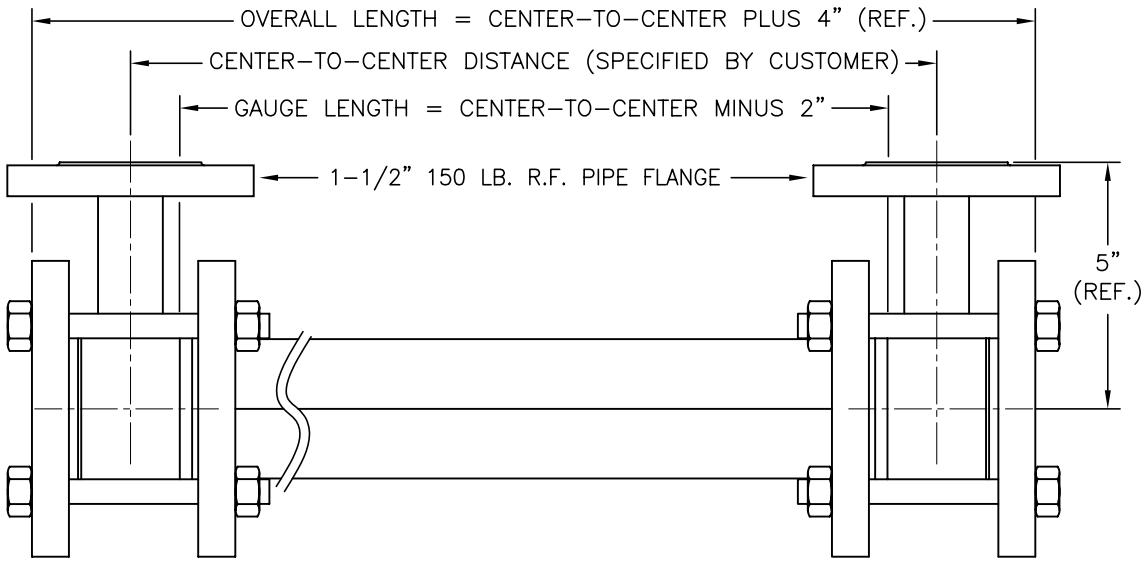

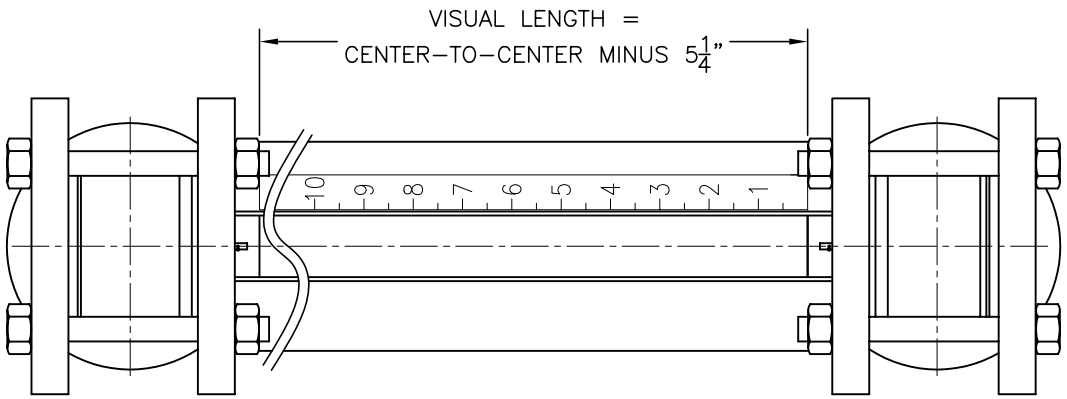

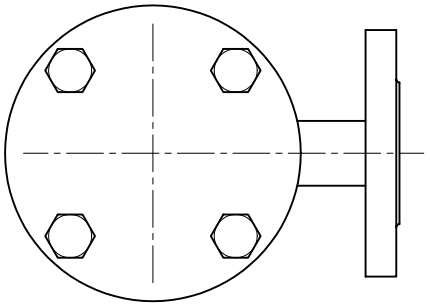

DIMENSION ARE FOR REFERENCE PURPOSES ONLY AND ARE SUBJECT TO CHANGE AT ANY TIME WITHOUT NOTICE.

COPYRIGHT © 2003-KENCO INTERNATIONAL, INC.-ALL RIGHTS RESERVED

REV.	DATE	BY	ECN	EXPLANATION:

KENCO ENGINEERING COMPANY
TULSA, OKLAHOMA

GAUGE, LIQUID LEVEL (OUTLINE DRAWING)
MODEL ESP–2.00–1.50

DATE: 02–03–03	SHEET: 1 OF 1	DRAWING NUMBER
DRN. BY: DPS	CHKD. BY:	C–43697
SCALE: NONE	REVISION:	