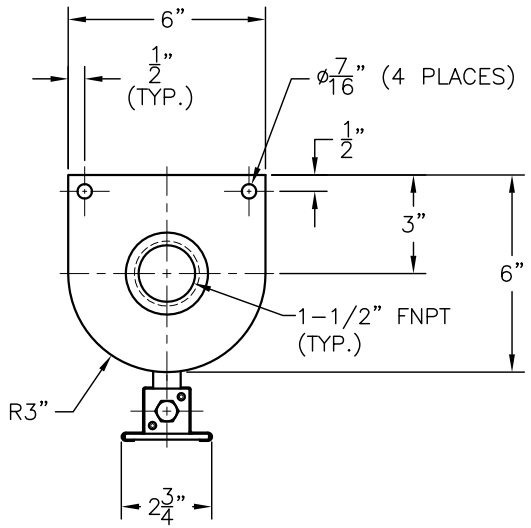

ORDERING INFORMATION			
MODEL NUMBER	TANK MATERIAL	SEAL MATERIAL	SCALE CALIBRATION
15856	CS OR SS	A, B, E, V OR T	SEE TABLE BELOW

EXAMPLE MODEL NUMBER: 15856-SS-V-GPH

SCALE CALIBRATION OPTIONS / DEFINITIONS	MAXIMUM PUMPING RATE/GAUGE VOLUME	SCALE CALIBRATION INCREMENT VALUE
GPH=GALLONS PER HOUR	100	2
LPH=LITERS PER HOUR	378.54	5
GPD=GALLONS PER DAY	2400	25
LPD=LITERS PER DAY	9084.96	100
GBV=GALLONS BY VOLUME	1.67	0.02
LBV=LITERS BY VOLUME	6.31	0.1

NOTE: GPH/LPH/GPD/LPD SCALES ARE BASED ON A ONE MINUTE TEST.

WETTED PARTS: TANK, SIGHT TUBE AND SIGHT TUBE O-RING SEALS

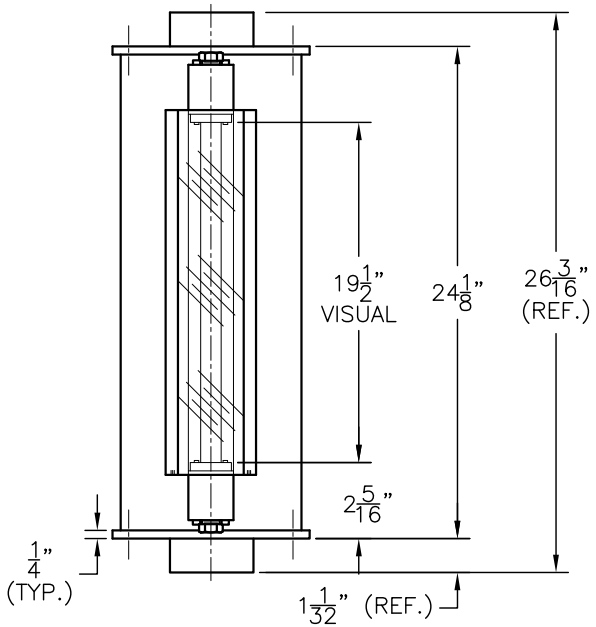

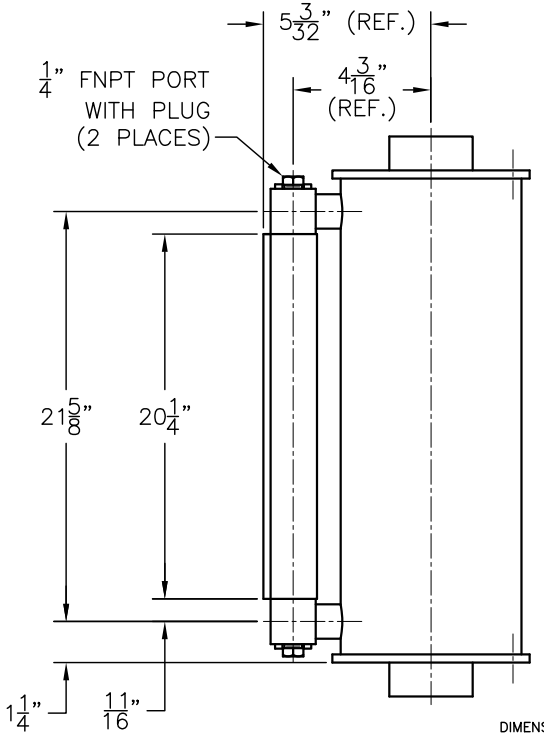

DIMENSIONAL NOTE:
DIMENSIONS ARE FOR REFERENCE PURPOSES ONLY AND ARE SUBJECT TO CHANGE AT ANY TIME WITHOUT NOTICE.

INFORMATION IS PROPRIETARY TO KENCO ENGINEERING CO.

PART NUMBER AND MATERIAL DESIGNATION:

DRAWING NO.	MODEL NO.	MATERIAL:
C-15856-CS	15856-CS	(CARBON STEEL TANK WITH 316/316L STAINLESS STEEL WETTED PARTS ON SIGHT GAUGE)
C-15856-SS	15856-SS	(316/316L STAINLESS STEEL CONSTRUCTION)

REV.	DATE	BY	CHKD.	ECN	EXPLANATION:
A	06-03-93	RC	–	–	ITEM 4 P/N WAS B-14109
B	12-14-94	RC	–	–	ITEM 4 P/N WAS A-18954, MAT'L WAS
					6061-T6 ALUM.
C	05-03-10	DS	PAS	000008	REDRAWN; WAS HAND DWG.; ITEM 2
					DESCRIPTION WAS PYREX GAUGE GLASS
					ITEM 6 WAS P-13698; ADDED SHEET 2 OF
					2; ADDED 13114-A

KENCO ENGINEERING COMPANY
TULSA, OKLAHOMA

POT, CALIBRATION (OUTLINE)
MODEL NO. 15856

DATE: 11-21-91 | SHEET: 1 OF 2 | DRAWING NUMBER
DRN. BY: RC | CHKD. BY:
SCALE: NONE | REVISION: C
C-15856